MICRO SOLENOID VALVE - DRY
3/2 - UF (Universal function)
Direct acting - Total isolation
Slip-on

D301

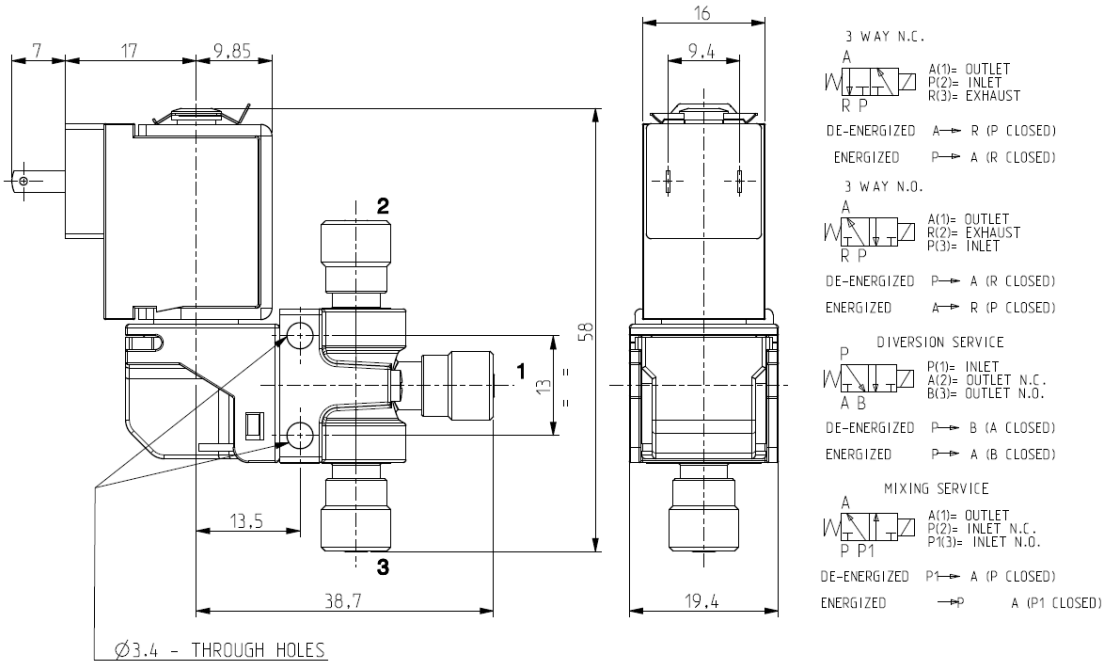

► GENERAL FEATURES

Total isolation micro solenoid valve: the actuator is totally isolated from the medium so that the wetted parts are just the body and the diaphragm.
Minimum overall dimension. Possibility of disassembling for inspection.
Reduced internal volumes: ~0,15 ml (0,15 c.c.).
Core duly coated by PTFE (polytetrafluoroethylene) based self lubricating material.
Suitable to shut off liquid and gaseous fluids (verify the compatibility of fluid with materials in contact).

► TECHNICAL FEATURES

Maximum allowable pressure (PS)	4 bar
Opening time	~10ms
Closing time	~10m
Fluid temperature	-10°C +90°C
Max viscosity	5°E (~37 cStokes or mm²/s)

► MATERIALS IN CONTACT WITH FLUID

Body	PSU (Polysulphone)
Sealing	VMQ or FPM

► COIL

Continuous duty	ED 100%
Encapsulation material	PET (polyethylene terephtalate) fiberglass reinforced
Insulation class	F (155°C)
Ambient temperature	-10°C +60°C
Electric connections	DIN 46340
Protection degree	IP 40 (EN 60529) with female wire terminals 2,8 x 0,5 totally insulated
Voltages DC	12-24V (+10% -5%) (Other voltages on request).

Port size	Orifice size (mm)	Differential pressure (bar)					Kv (m^3/h)	Series and type		Power absorption			Sealings	Notes	Weight (kg)
		Δp min	Δp max												
			Gases		Liquids										
			AC	DC	AC	DC		Valve	Coil	AC (VA) Inrush	AC (VA) Holding	DC (W)			
Slip-on (*)	1,5	0	-	3	-	3	0,06	D301S54	ZE30A	-	-	4	VMQ	1	0,055
								D301V54					FPM		

► NOTES

- Sealings : VMQ = Silicone elastomer FPM = Fluoro-carbon elastomer
- Available with Z031A coil on request (Electric connections: DIN 46340 - micro-connector; Protection degree: IP65)

1 - These valves can become 2/2 NC or 2/2 NO by mounting the screwed cap on the port as shown overleaf. The performances remain unchanged.
(*) Suitable for tube 3mm ID and 4,3mm OD.

0406/1401

▶ SPARE PARTS

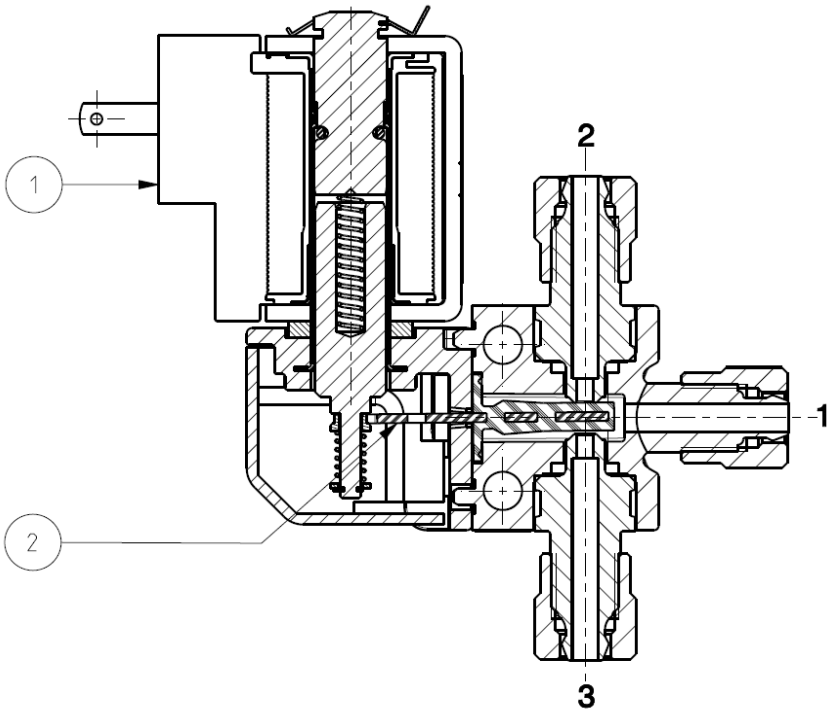

Kit description		Kit P.N.	Consisting of.
Lever seal kit	D301S54 D301V54	2696903R 2696902R	Lever seal pos. 2
Coil	ZE30A		Coil pos. 1

ASSEMBLING SCHEME - SEE NOTE 1

2/2 SOLENOID VALVE NC

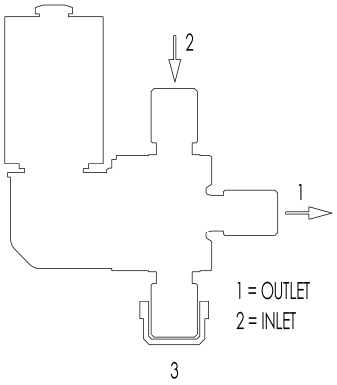

2/2 SOLENOID VALVE NO

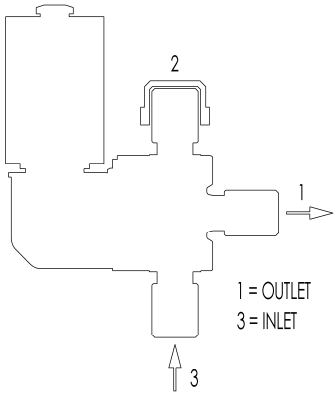

▶ MOUNTING

- Solenoid valve can be mounted in any position.

THE VALIDITY OF REPORTED DATA IS REFERRED TO THE DATE OF ISSUE. POSSIBLE UPDATES ARE AVAILABLE ON REQUEST.